RL3pDT120dc 120Vdc Relay Installation for SB200, SB220, SB230

The patent pending RL3pDT120dc is a superior replacement for the Heathkit K1 69-55 relay, Heathkit 69-5 relay, and similar 110 or 120Vdc antenna relays.

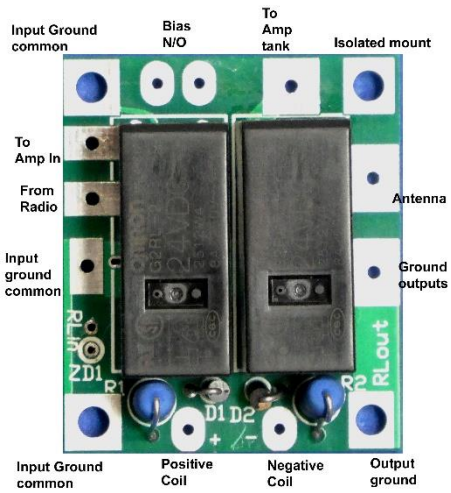

1)Three input grounds are common. Either or both can be shield connection points for input cable shields. At least one should be grounded to chassis
2)Bias is a normally open relay contact. Not normally used in the SB200
3)Amp Tank is the coax center or wire lead from the amplifier tank output
4)Isolated mount is a floating mounting pad, it has no connection
5)Antenna is the center conductor to the antenna or amplifier output connector
6) Ground outputs should be the shield of output coaxes and should have a mounting screw or wire direct to the chassis from Output Ground
7) Negative Coil always has to go to the most negative coil connection. This would be the negative relay power supply in the SB200
8)Positive Coil always must go to the more positive relay coil connection. This is the bias power supply in the SB220 series
9)Input Ground commons are the input relay lead shields or chassis ground. To avoid ground loops this should not share a common point with the chassis

SB200 Installation

While most components are readily available, we recommend the full SB200RLY kit:

SB200RLY Kit contents:
(1) 4” length Teflon coax stripped and tinned for the input jack connection

(2) 1” tall metal spacers and hardware

(1) wire 2-1/2” #16 PTFE

(1) Assembled 120Vdc sequenced PCB board

Mounting in SB200 should look like this:

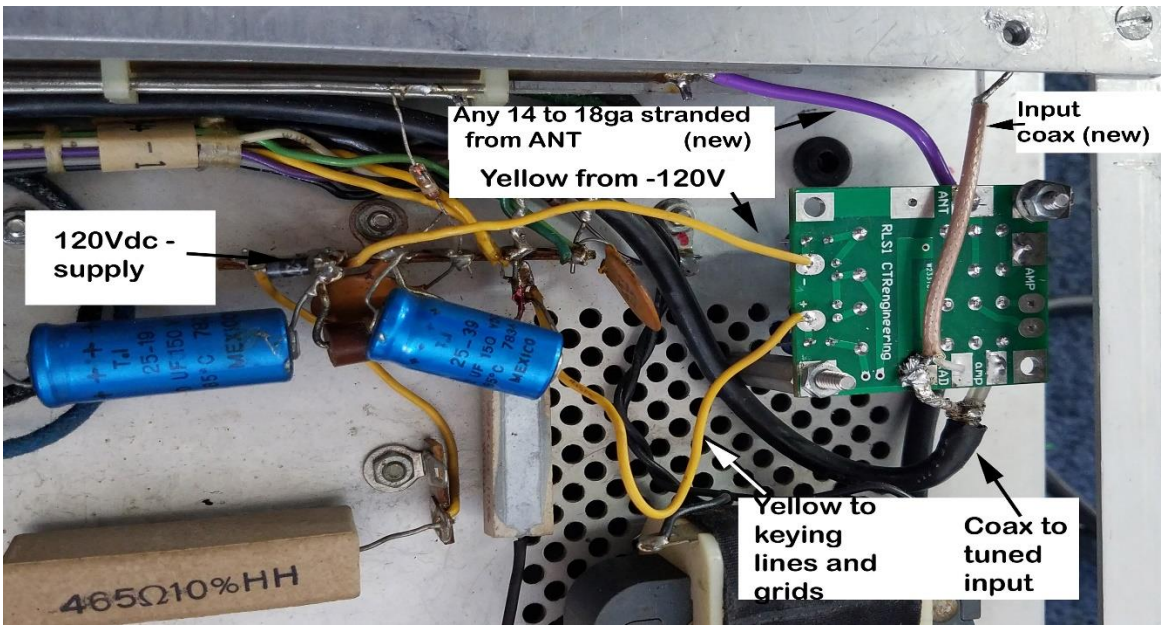

SB200 Bottom:

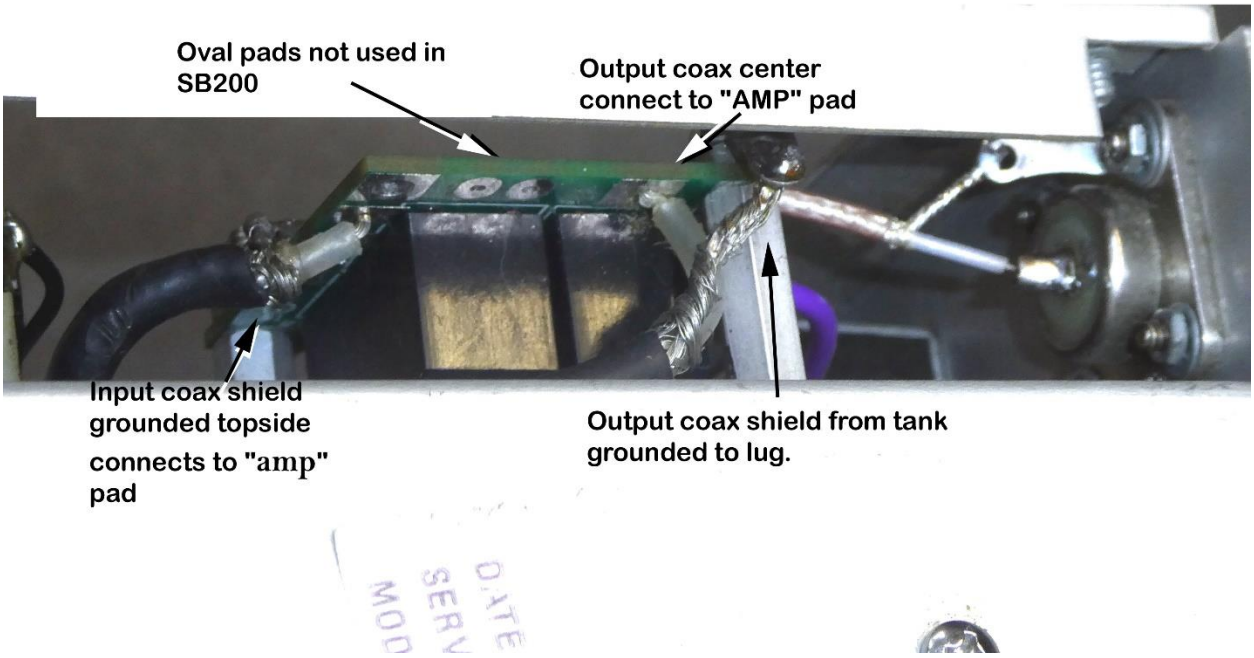

SB220 Installation

While most components are readily available, we recommend the full SB220RLY kit.

SB220RLY Kit contents:
(1) 3” length back silicone insulated wire #20 AWG for grounding

(1) 2” square mounting tape

(1) 100K bias resistor

(1) Assembled 120Vdc PCB board

These pictures are of an early SB220 model installation. The later units follow the same general method:

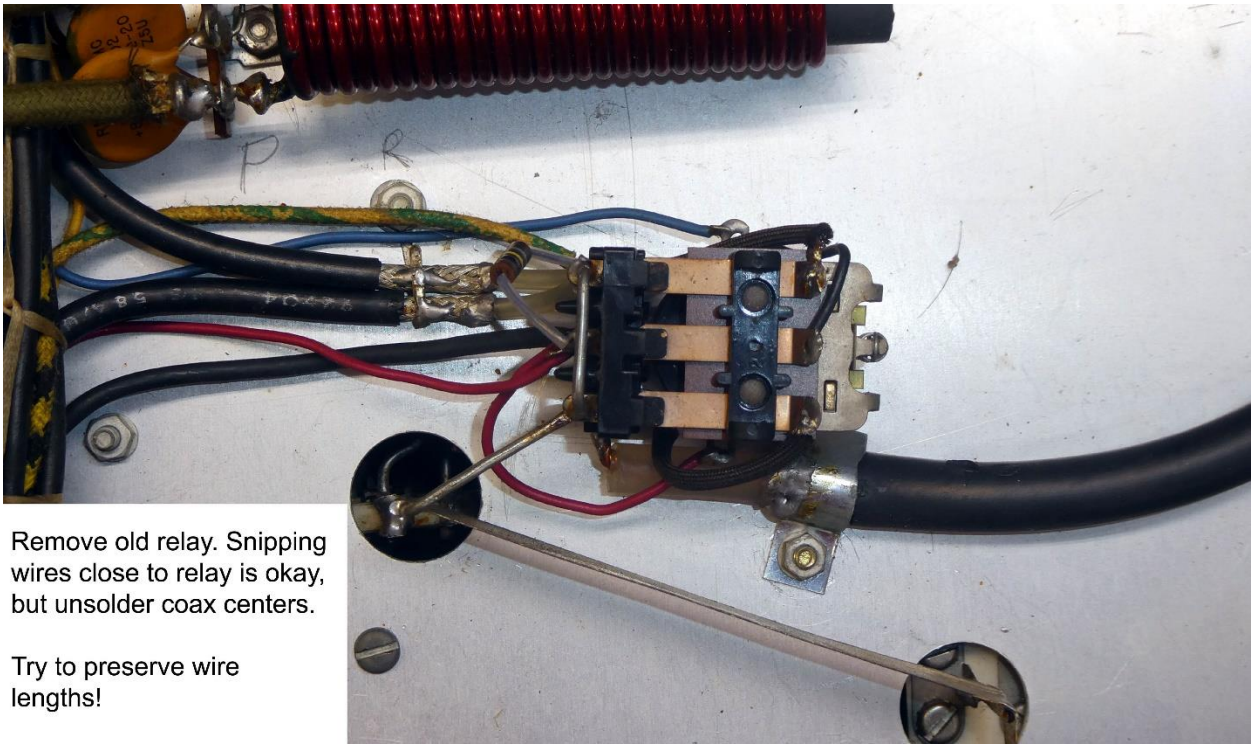

Remove old relay. Snipping wires close to relay is okay, but unsolder coax centers.

Try to preserve wire lengths!

Remove relay mounting screw and grommet:

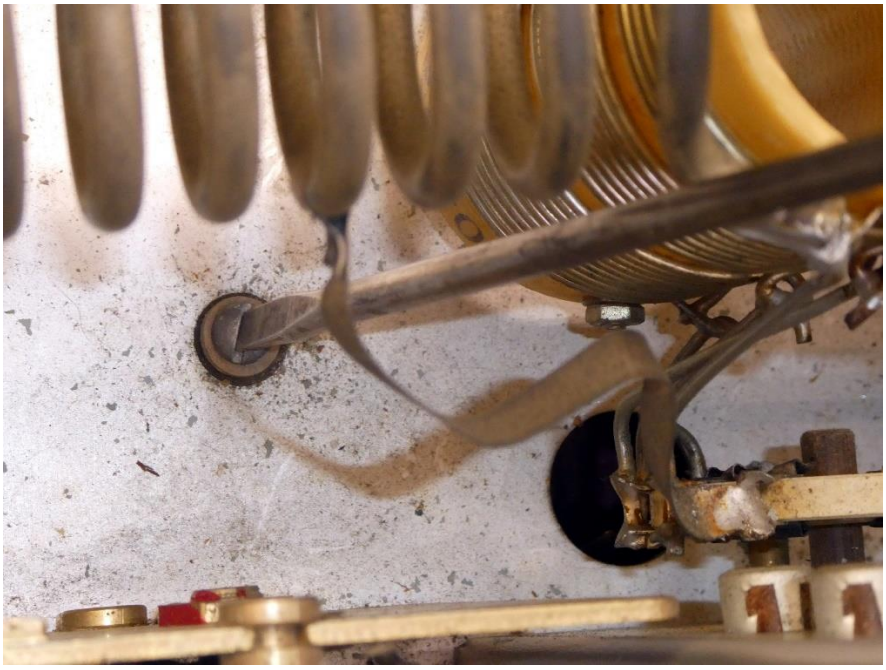

Clean relay area:

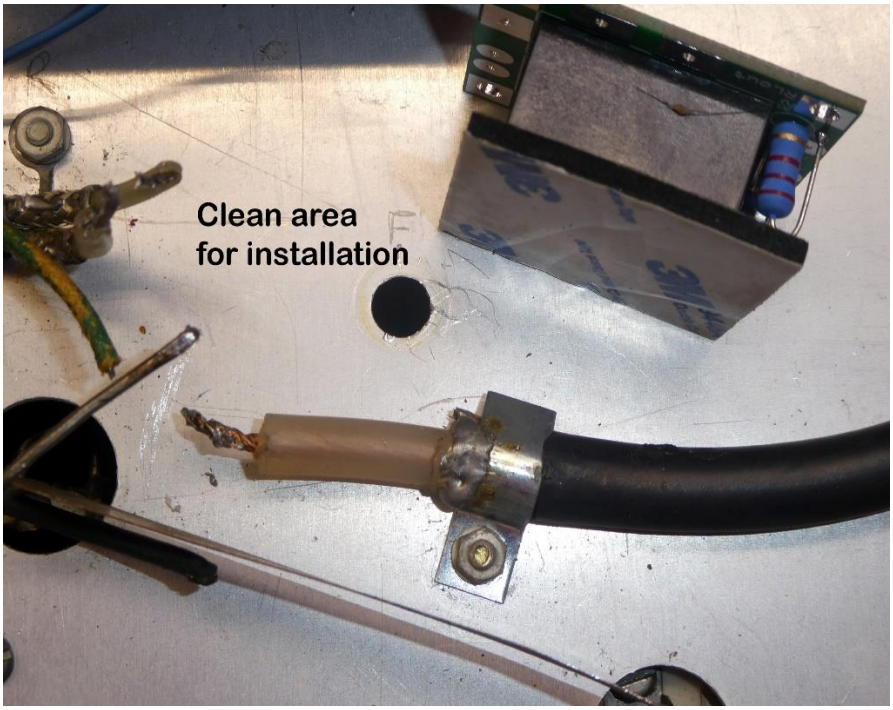

Install board:

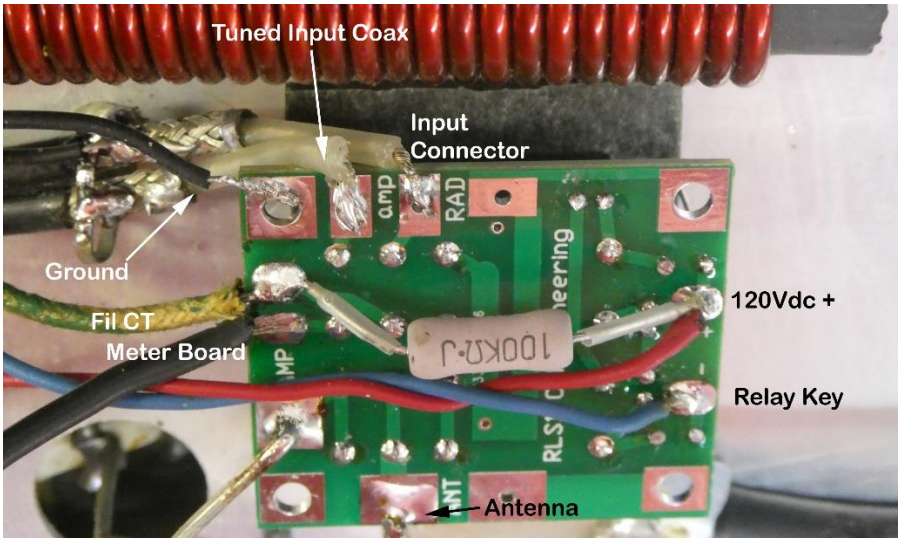

Final view:

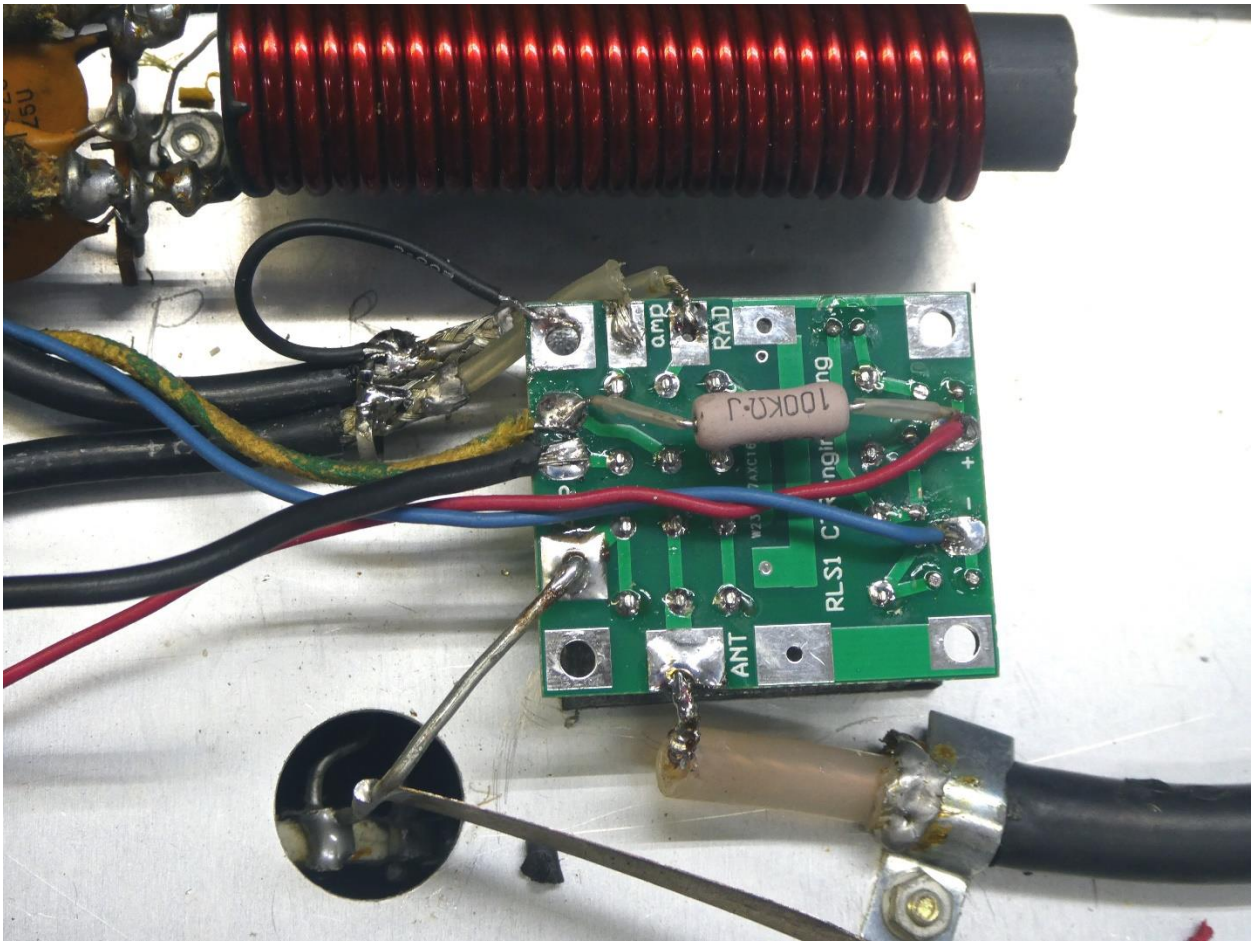

Important!! For best 10 meter and 15-meter SWR the shields of cables MUST be grounded as shown! The RF path involves the chassis path to the shields at both ends of the cables!

Newer Relay Board

We are now phasing into a newer relay board that looks like this:

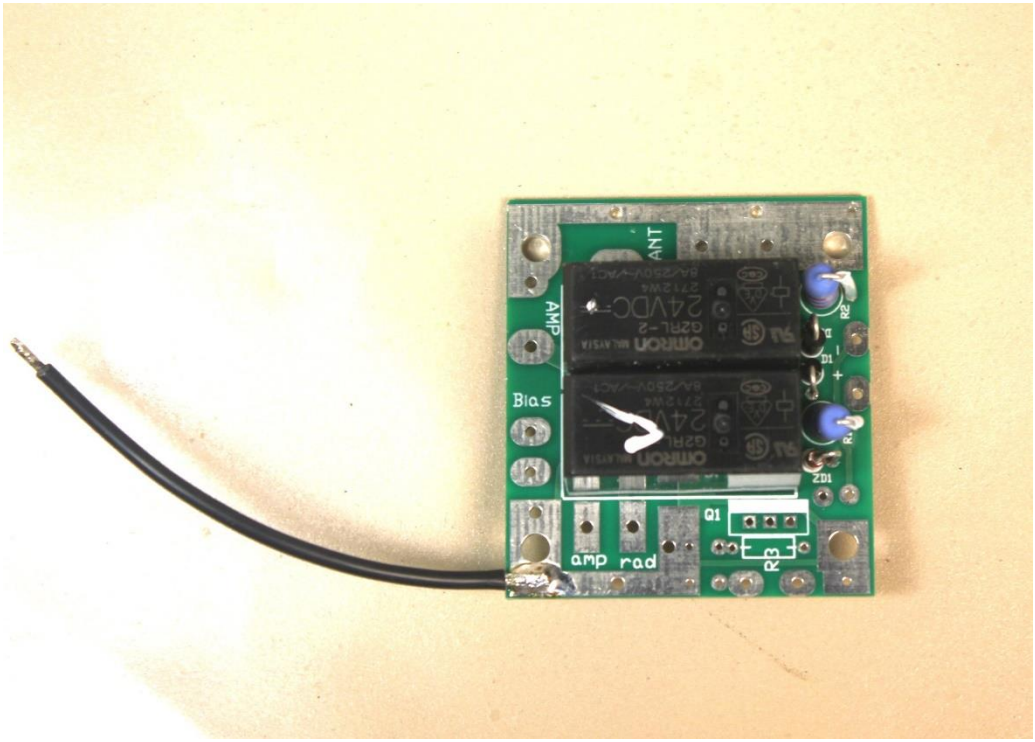

This board has provisions for more amplifiers and to include a relay buffer. These are the SB220 amplifier connections with this new board:

Label side view (mounted down against chassis)

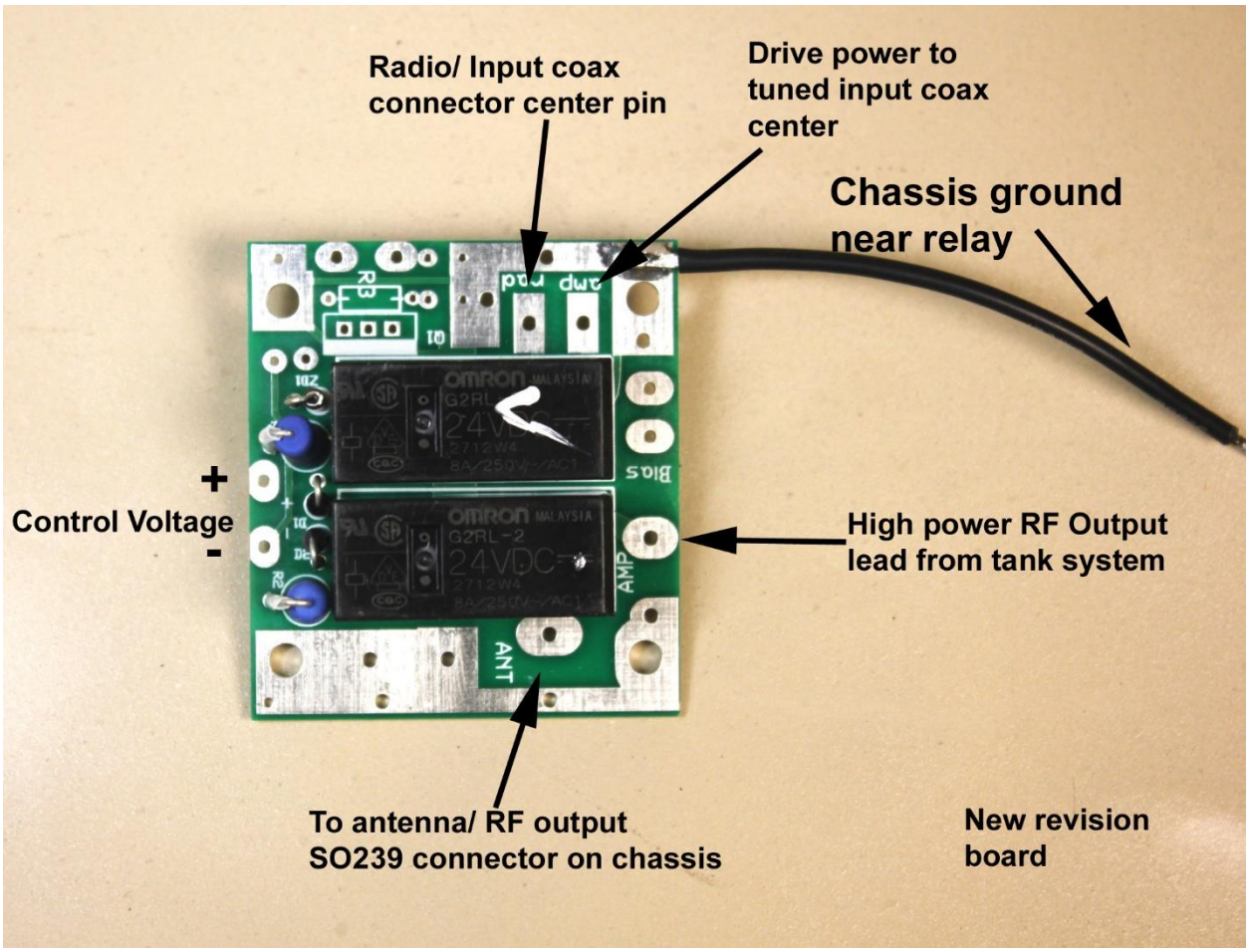

Bottom Side of SB220 newer board normally mounted up. The wiring is basically the same. The original connection pads are in the same general places. I just made the ground plane pads larger and added more holes for other adaptations. Electrically it is identical.

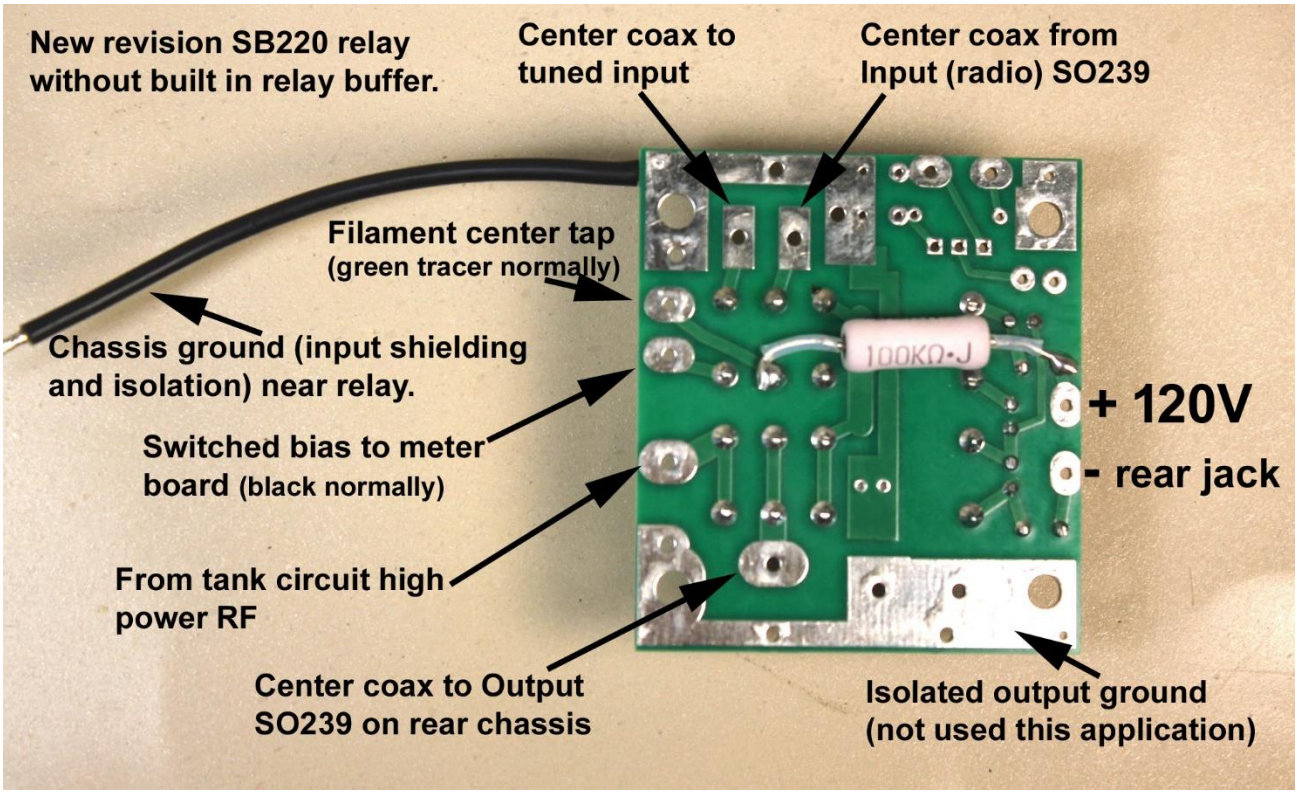
New revision SB220 relay without built in relay buffer.
Center coax to tuned input
Center coax from Input (radio) SO239
Filament center tap (green tracer normally)
Chassis ground (input shielding and isolation) near relay.
Switched bias to meter board (black normally)
From tank circuit high power RF
Center coax to Output SO239 on rear chassis
Isolated output ground (not used this application)
+ 120V
- rear jack
100KΩ-J